Nayax

# VPOS Media 4 Mini

## Quick Installation Guide

Nayax Ltd. © All rights reserved. **Version:** VPOSMedia4Mini_InstallationGuide_v2.0_ENG **Publication Date:** 01 Jan 2026 #1

Nayax

# Table of Contents


01 ..... Cover Page

02 ..... Table of Contents

03 ..... Introduction

04 ..... What's in the Box

05 ..... Pre-Installation Requirements

06~07 ..... Installation Steps

08 ..... Testing the Installation

09 ..... Troubleshooting

11 ..... Contact

Nayax Ltd. © All rights reserved. 

Nayax

## Introduction

The **VPOS Media 4 Mini** is a cashless payment terminal designed for various self-service environments, including vending machines, kiosks, kiddie rides, and other unattended automatic machines.

This guide provides step-by-step instructions for installing and configuring **VPOS Media 4 Mini** cashless payment terminals. It is intended for:

- **Technicians installing the device**
- **Machine operators manage the device**
- **System integrators are responsible for the configuration**

This guide covers:

- **Mounting the VPOS Media 4 Mini device**
- **Connecting power and communication cables (Pulse, Marshall, LAN, 40-pin cable, SIM)**

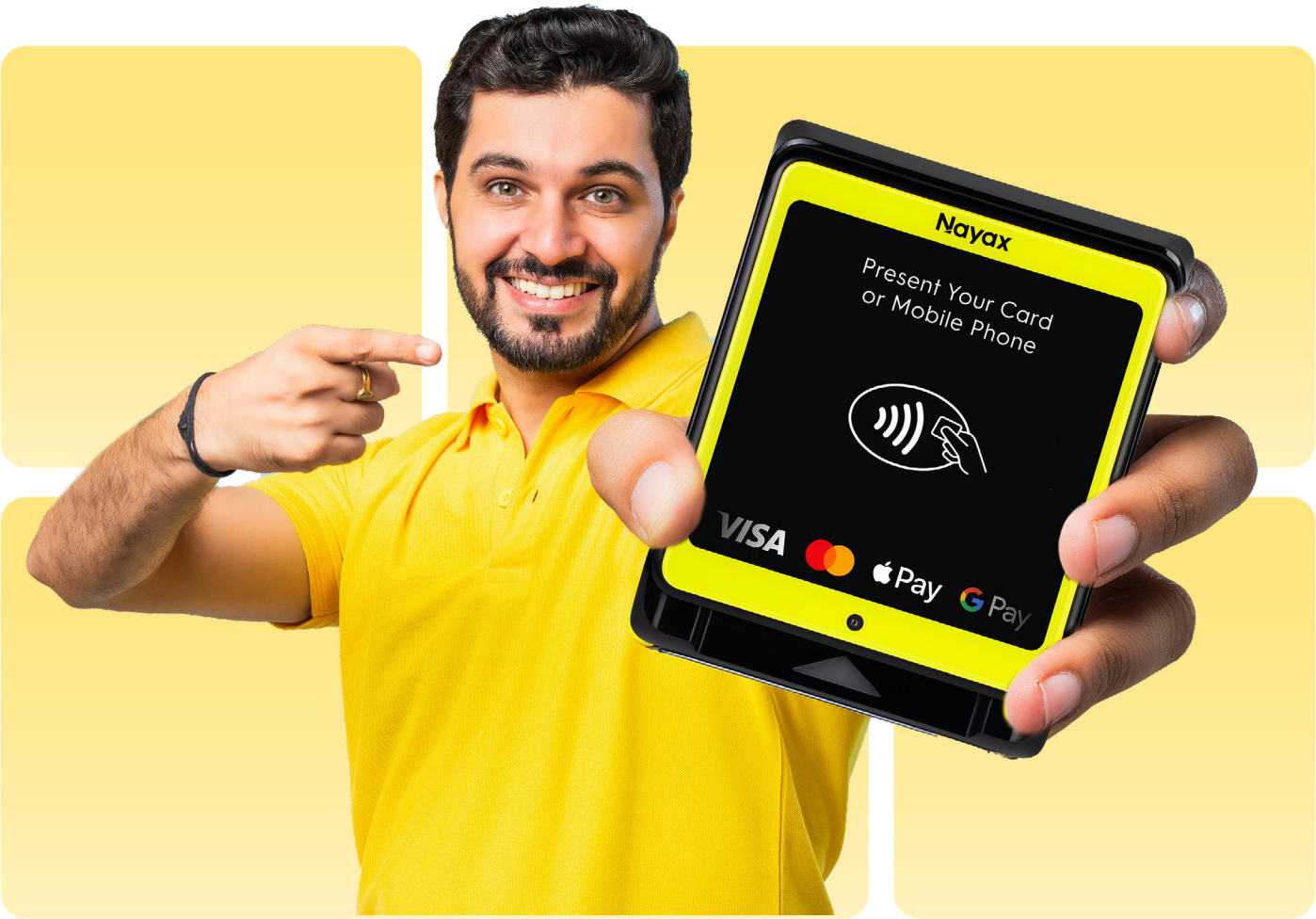


Nayax Ltd. © All rights reserved. 

## What's in the Box

The VPOS Media 4 Mini package includes the following components:

| Item | Description |
|---|---|
| **VPOS Media 4 Mini Device** | All-in-one payment and telemetry terminal with a touchscreen, card reader, and communication interfaces. |
| **Screws & Fasteners** | Required for securing the device to the machine. |

# Specific Components Not Included By Default

Some components for the VPOS Media 4 Mini are not included by default and are supplied as separate accessories for specific machine integrations or protocol requirements. See the table below for details and necessary actions.

| Item | Description |
|---|---|
| **Marshall, or Pulse Cable** | Not included by default. Required only for specific machine integrations. |

Nayax Ltd. © All rights reserved. 

Nayax

## Pre-Installation Requirements

Before beginning the installation, ensure that the following requirements are met:

### Nayax Core Setup and PCI Activation

- The device must be attached to a core machine and correctly set up in Nayax Core to perform transactions. Incorrect configuration may cause transaction failures.
- To accept credit cards, the device must be PCI-compliant and activated. Complete the PCI activation process at activate.nayax.com. This involves filling out a wizard-type form.

## Power

**Ensure that the power adapter can supply the required voltage and current as specified in the "Power Supply" row of the "Product Specifications" section of this manual.**

## Connectivity

- **Ethernet:** Requires a network connection via an Ethernet cable.
- **Wi-Fi:** Configurable via Nayax Core or the Technician App.
- **SIM:** VPOS Media 4 Mini uses an eSIM (embedded SIM). Activation is automatic.

## Tools

- **Torque Screwdriver:** To ensure screws are tightened with the defined torque (Nm).
- **Torque Swiss Spanner Wrench:** Recommended for tightening adapter nuts during internal installations. The required torque ranges from 0.9-1Nm to 1 Nm. The spanner wrench is not included in the kit.
- **Drill and stencil:** Required for external installations where drilling is necessary.

Nayax Ltd. © All rights reserved. 

Nayax

Installation Steps

# Mount the VPOS MEDIA 4 Mini Device

**External Installation**

1. Select a flat, accessible surface on the machine for mounting.
2. Use the stencil to mark and drill:
   a. Four 5 mm mounting screw holes.
   b. One 40 mm cable routing hole.
3. Secure the device using the provided screws.
4. Clean the installation area of burrs after drilling.
5. Ensure the device's rear seal is assembled correctly and undamaged before installation.
6. Pass the cables through the hole and connect them to the device:
   a. Connect the device to power:
      I. **VPOS MEDIA 4:** Connect the 40-pin cable to the machine (primary power source).
   b. At least one of the following must be available for network connectivity:
      I. **SIM:** VPOS Media 4 uses an eSIM (embedded SIM) (activation is automatic).
7. Secure the device using the original screws with a torque of 0.9-1Nm.

**VPOS Media 4 Mini stencil**

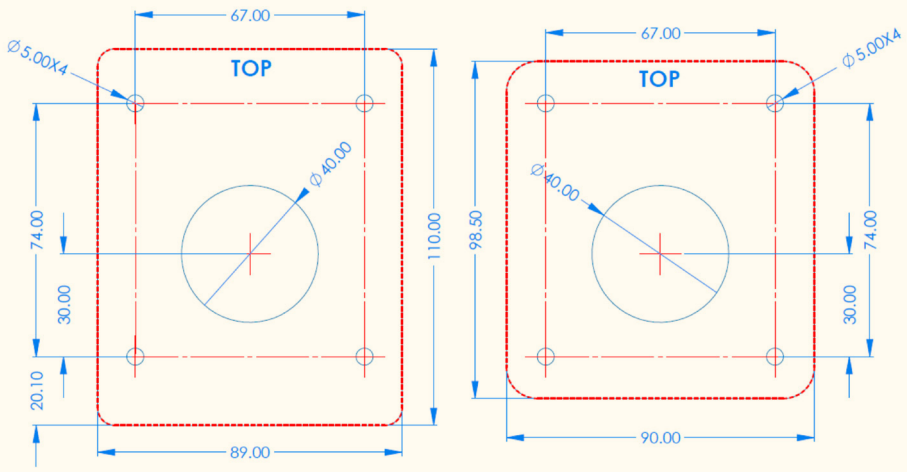


VPOS Media 4 Mini

VPOS Media 4 Mini (Cube)

## VPOS Media 4 Mini external mounting

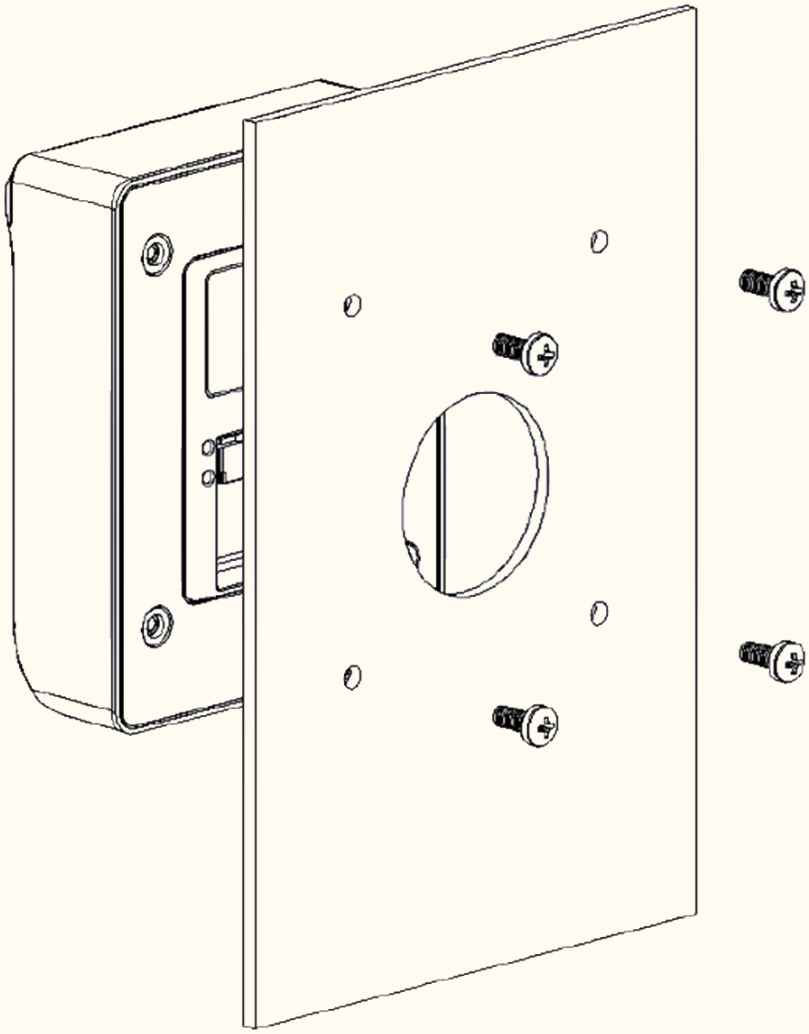

**Accessing the Device Menu:**
For operator and technician access to "Device Information" and other troubleshooting options, tap the top-left corner of the screen 5 times.

**Note:**
If using Wi-Fi or SIM, ensure the machine is within a good signal range. If using Ethernet, verify that the cable is securely connected and operational.

Nayax Ltd. © All rights reserved. 

Nayax

## Testing the Installation

### 1 Power On the Device

1. Turn on the machine.
2. The VPOS Media 4 Mini will automatically power up and begin its self-test process.

### 2 Self-Test Process

**The device will run a self-test to check:**

1. Hardware components (screen, keypad, sensors).
2. Connectivity (Ethernet, Wi-Fi, 4G LTE).
3. Payment system readiness (NFC, EMV).

### 3 Perform a Test Transaction

1. Present Card or select an item on the machine.
2. Process a test payment using NFC, Chip & PIN.
3. Confirm that:
   - The payment is approved.
   - The machine dispenses the product.
   - The transaction appears in Nayax Core reports.

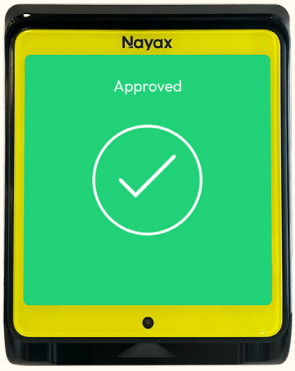

Nayax

## Troubleshooting

If you encounter issues with the VPOS Media 4 Mini device, refer to this guide to diagnose and resolve common problems before contacting Nayax Support.

**Tip:**
Many installation and connectivity issues can be resolved by following the Pre-Installation Requirements section and checking the Nayax Core setup before troubleshooting.

# Common Issues & Solutions

| Issue | Possible Cause | Solution |
|---|---|---|
| **Device Does Not Power On** | • The machine is not supplying the correct voltage input.<br>• Loose or disconnected power cable.<br>• Faulty power source. | • Verify the correct voltage for the device: 12–42V DC.<br>• Ensure all cables are securely connected and check for any visible damage. |
| **No Network Connection** | • Ethernet cable is disconnected, or network equipment is misconfigured.<br>• Wi-Fi SSID or password is incorrect.<br>• Poor SIM signal or incorrect SIM settings.<br>• Network settings not configured in Nayax Core. | If using Ethernet, ensure the LAN cable is securely connected and check network routing/firewall settings:<br>• If using Wi-Fi, verify the credentials in the Technician App or Nayax Core.<br>• If using SIM, ensure the device has network coverage.<br>• Restart the device and check Nayax Core logs for connection attempts. |
| **Payment Transactions Fail** | • The payment method is not enabled in Nayax Core.<br>• Poor network connectivity.<br>• The card reader is dirty or damaged. | • Log in to Nayax Core and confirm that NFC, Chip, and Swipe payments are enabled.<br>• Verify that general payment options like credit card processing are properly configured (contact Nayax if you are unsure). Verify network stability and retry the transaction.<br>• Clean the chip reader and magnetic stripe using a dedicated card cleaning card. |

| | | |
|---|---|---|
| **Tamper Alert Triggered** | • The device was physically opened and received a strong impact, activating the tamper switch. | • If tampering is detected, the device will lock permanently and require Return Merchandise Authorization (RMA) for servicing.<br>• There is no remote reset option for tamper alerts—contact Nayax Support for instructions. |
| **The Device is Frozen or Unresponsive** | • Software crash or connectivity issue. | • Restart the device following the proper power cycle procedure.<br>• Disconnect the power and wait until all indicator lights turn off before reconnecting. |

## Device Restart Procedure

If the device is unresponsive, restart it using the steps below.

**Soft Restart (Power Cycle)**
Recommended for minor software crashes or connectivity resets.

1. Turn off the machine or disconnect external power.
2. Wait 30 seconds.
3. Reconnect the power and allow the device to reboot.

**Hard Restart (Full Power Reset)**
If the device remains unresponsive, perform a hard restart:

1. Disconnect all cables from the device (40-pin cable, USB-C, or external power box).
2. Wait at least 5 minutes to ensure the capacitors fully discharge.
3. Reconnect the power and allow the system to start up.

**Warning:**
A hard restart should only be performed if the device is unresponsive.
If the issue persists, contact Nayax Support for further troubleshooting.

Nayax

## Contact

For technical support, warranty inquiries, or additional assistance, contact Nayax Support through the following channels.

# Nayax Support Contact Information

| Support Method | Details |
|---|---|
| **Phone** | +1-301-591-2696 |
| **Email** | support@nayax.com |
| **Help Center** | Nayax Support Portal |
| **Help Center** | Nayax Documentation |

Before Contacting Support:
To help Nayax Support resolve your issue efficiently, have the following details ready:

- Device serial number (located on the back of the device).
- Issue description, including troubleshooting steps that have already been attempted.
- Screenshots or error messages.

Nayax Ltd. © All rights reserved. 

Nayax

## Regional Support

Check for local Nayax offices on the Nayax Website or contact your authorized distributor for region-specific support.

**QR Code for Support Portal:**

Nayax Ltd. © All rights reserved.